TEMPORARY CLASSROOMS AT PLEASANT VALLEY ELEMENTARY SCHOOL

591 ELLINGTON ROAD
SOUTH WINDSOR, CONNECTICUT 06074

TOWN OF SOUTH WINDSOR BID # 1920-006
JAN. 15, 2020

LIST OF DRAWINGS

Drawing	
C-0.0	Cover Sheet
A-1.0	Foundation Plan
A-2.0	Floor plan 3 Classrooms
A-2.1	Enlarged Floor Plan
A-2.0a	Floor Plan 5 Classrooms
A-3.0	Elevations
A-4.0	Reflected Ceiling
A-5.0	Details

ARCHITECT

PHILIP H. CERRONE III A.I.A.
421 MEADOW STREET
FAIRFIELD, CONNECTICUT 06824
203-333-2066

SUPERINTENDENT

KATE CARTER, Ed.D

DIRECTOR OF FACILITY OPERATIONS

DARRELL CROWLEY

THIS DRAWING IS THE PROPERTY OF THE ARCHITECT: HAS BEEN PREPARED SPECIFICALLY FOR THE OWNER FOR THIS PROJECT AT THIS SITE, AND IS NOT TO BE USE FOR ANY OTHER PURPOSE, LOCATION, OR OWNER, WITHOUT WRITTEN CONSENT OF THE ARCHITECT.

REVISED:

SCALE: N.T.S.
DATE: 01/21/2020
DRAWN: L.F.O.

PHILIP H. CERRONE III, AIA, NCARB
ARCHITECT
421 Meadow Street
Fairfield, CT 06824
203.333.2066

Relocatable Classroom at:
Pleasant Valley Elementary School
591 Ellington Road
South Windsor, Connecticut 06074

Cover Sheet

19-32

C-0.0

GENERAL NOTES:

1. PROVIDE 10" DIA. X 42" DEEP FOOTINGS AT EACH UPRIGHT OF ALL EXTERIOR RAMPS, STAIRS, PLATFORMS.
2. THE FOUNDATION CALCULATIONS, FOOTING & PIER DESIGN, & INSTALLATION TO BE BY THE PORTABLE CLASSROOM MANUFACTURER
3. BOTTOM OF FOOTINGS TO BE A MINIMUM OF 42" BELOW FINISH GRADE.
4. FOUNDATION PLAN, FLOOR FRAMING & DECK FRAMING PLAN TO BE SIGNED & SEALED BY A STRUCTURAL ENGINEER RETAINED BY THE CONTRACTOR
5. FOUNDATION PLAN & DETAILS SHOWN ARE SCHEMATIC & NOT INTENDED FOR CONSTRUCTION.

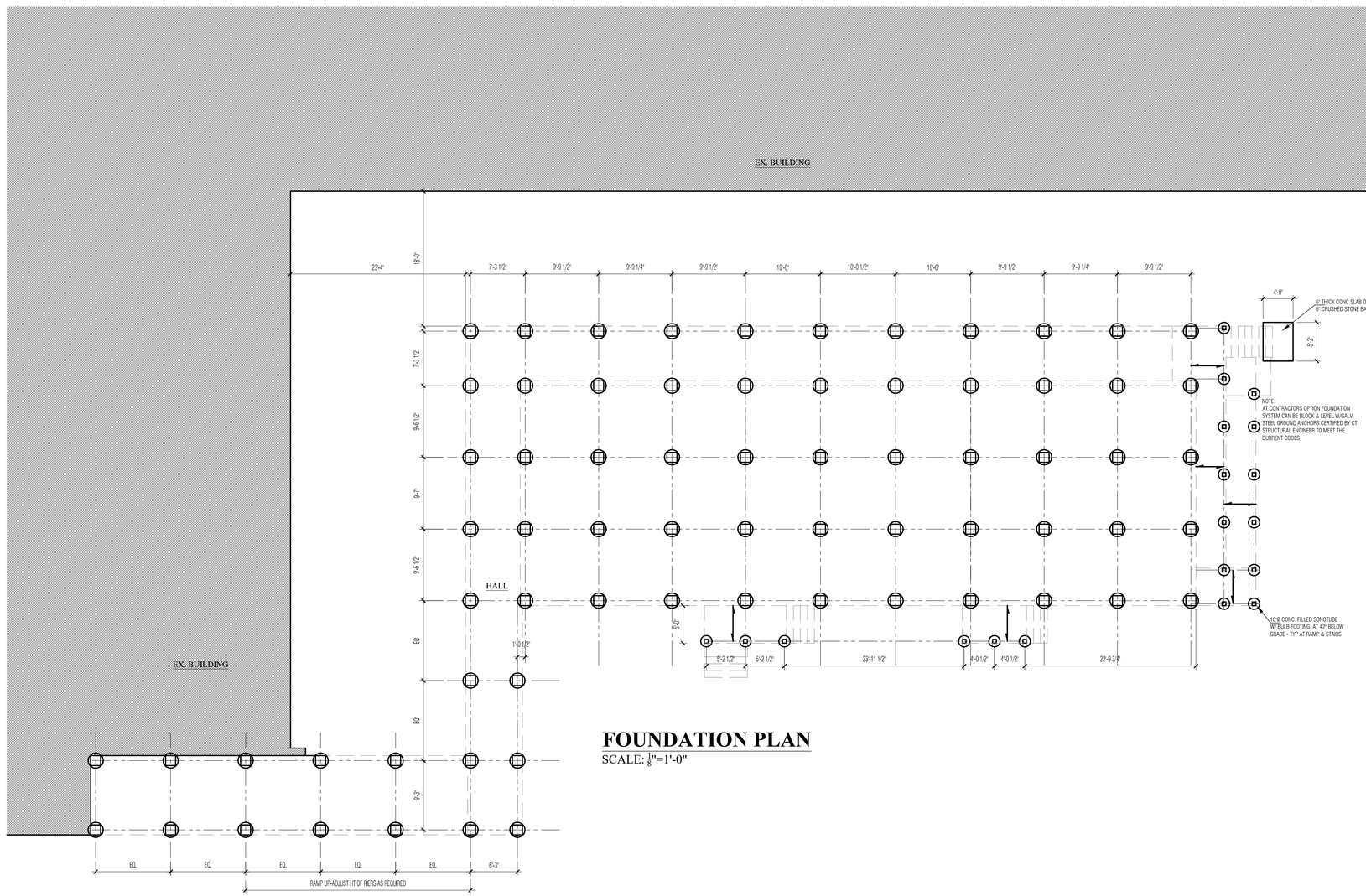

FOUNDATION PLAN

SCALE: $\frac{1}{8}$"=1'-0"

NOT FOR CONSTRUCTION

TOWN OF SOUTH WINDSOR BID # 1920-006

THIS DRAWING IS THE PROPERTY OF THE ARCHITECT: HAS BEEN PREPARED SPECIFICALLY FOR THE OWNER FOR THIS PROJECT AT THIS SITE, AND IS NOT TO BE USE FOR ANY OTHER PURPOSE, LOCATION, OR OWNER, WITHOUT WRITTEN CONSENT OF THE ARCHITECT.

REVISED:

SCALE: 1/8"=1'-0"

DATE: 01/21/2020

DRAWN: L.F.O.

PHILIP H. CERRONE III, AIA, NCARB
ARCHITECT
421 Meadow Street
Fairfield, CT 06824
203.333.2066

Relocatable Classroom at:
Pleasant Valley Elementary School
591 Ellington Road
South Windsor, Connecticut 06074

Foundation Plan

19-32

A-1.0

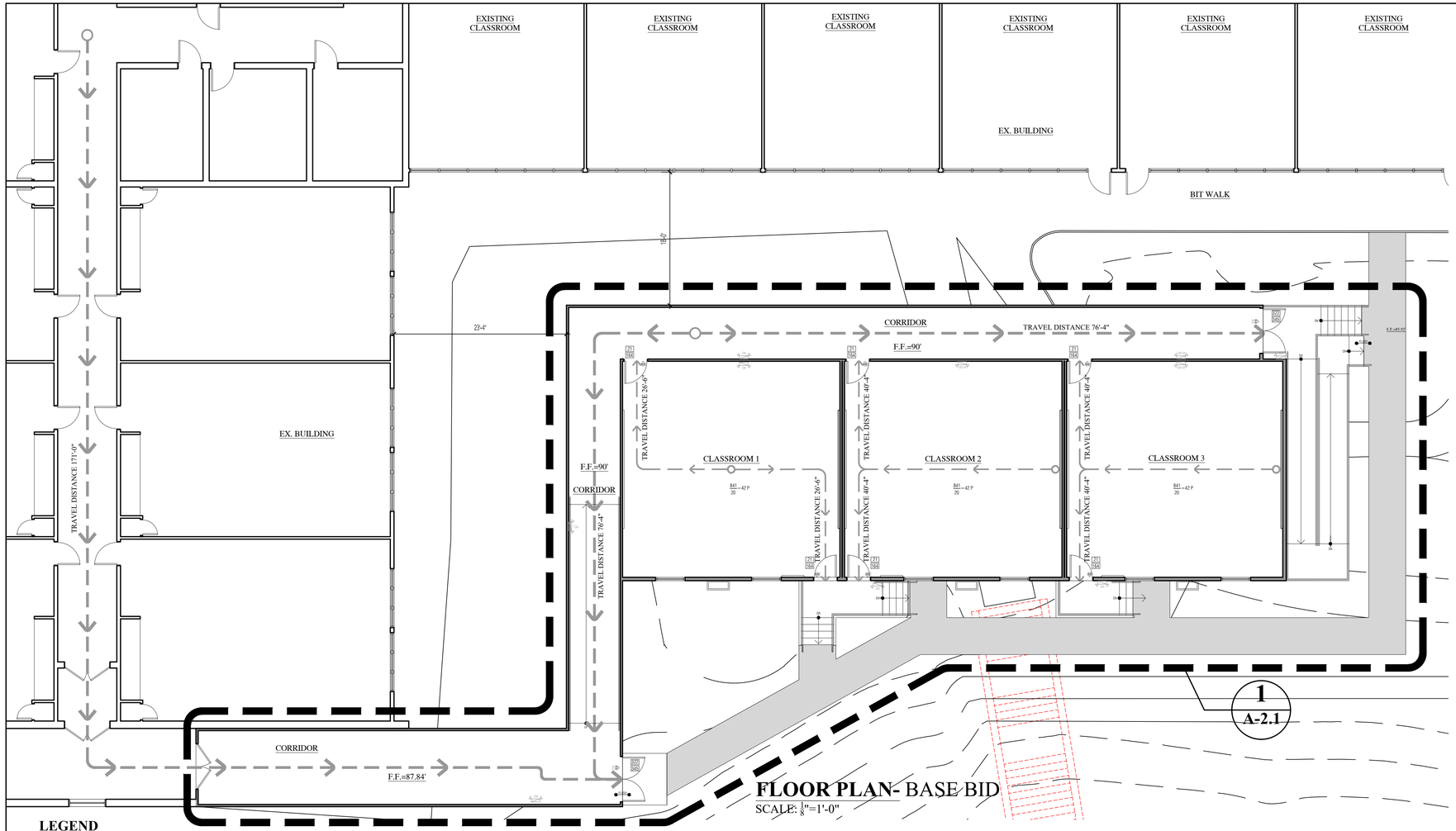

FLOOR PLAN- BASE BID

SCALE: $\frac{1}{8}$"=1'-0"

REFERENCE NORTH

USE GROUP
Educational - E
IEBC Classification; Addition

CONSTRUCTION TYPE (Chapter 6)
Type VB; New Construction-Modular classrooms
Type IIIB & VB; Existing Building

BUILDING HEIGHT (Chapter 5)
Allowable Height (story/ ft): One Story; 20 ft
Actual Height (story/ ft): One story; 16 ft

BUILDING AREA (Chapter 5)
Base Allowable Floor Area new construction/ Fire Area; 9500 sf
Total Allowable sf for new construction with fire wall separation; 9,500 sf
New Construction: 4,370 sf
Existing Building: 47,264 sf

FIRE-RESISTANCE RATED REQUIREMENTS FOR BUILDING ELEMENTS
(Table 601) VB

a.	Structural frame: including columns, griders, trusses	0 Hr.
b.	Bearing walls:	
	Exterior:	0 Hr.
	Interior:	0 Hr.
c.	Nonbearing walls and partitions (Exterior)	0 Hr.
d.	Nonbearing walls and partitions (Interior)	0 Hr.
e.	Floor construction (including supporting beams and joists)	0 Hr.
f.	Roof construction (including supporting beams and joists)	0 Hr.

Fire rating of exterior walls (Table 602)
Separation distance; Greater than 10' 0 Hr. Required

SEPARATIONS
Corridor Separations (IBC 1018); 1 hr fire rated

EXIT ACCESS TRAVEL DISTANCE (Table 1017.2)
Maximum allowed travel distance without Fire Sprinkler
Use Group E = 200 ft

Common path of travel (Table 1006.2.1) without fire sprinkler
Use Group E = 75 ft

OCCUPANT LOAD (1004.1.2)
Educational; 1/20 sf for classrooms

CORRIDORS (IBC 1020)
Educational > 100P Min. width = 72"
1 Hr. rated > 30P

EXITS
- Spaces with one exit (Table 1006.2.1)
  Use Group E: Max. 49 people/74 ft.
- Stories with one exit (Table 1006.3.2(1) & (2)
  Use Group E : 49 people & 75 ft. max
  Dead Ends (IBC 1020.4) 20 ft.
- Stairs (Section 1005 & 1011.2)
  Width required: 44" minimum & 0.3" per person; 36" if less than 50P
- Doors (IBC 1005.3.2 & 1010.1.1)
  Min. 32" clear width & 0.2" per person
- Ramps (IBC 1010.6- Means of Egress Ramp)
  Min. 72" clear width & 0.2" per person
- Panic Device (IBC 1010.1.10)
  'E' occupancy > 50P

MODIFICATIONS
Modification for exemption from subsection (a) of CGS 29-315, as amended by
Public Act 05-31. Pending

THRESHOLD BUILDING CONDITIONS
Not Applicable

BUILDING AREAS FOR GRANT CALCULATIONS (ENTIRE FACILITY)

Existing unaltered construction	47,264 sf
Existing altered construction	0
Existing being demolished	0
Total existing construction	47,264 sf
Total new construction/ addition	4,370 sf
Total facility proposed	51,634 sf

MINIMUM PLUMBING FIXTURE COUNT (IPC Chapter 4)

		Required	Provided
Group E Occupancy:			
(Design Load = 1218)	W/C	25	35
	Lav	25	28
	D/F	12	

APPLICABLE CODES
2018 Connecticut State Building Code including the following:
2015 International Existing Building Code
2015 International Building Code
Connecticut Supplement, 2018
2015 International Energy Code
2015 International Mechanical Code
2015 International Plumbing Code
2017 NFPA 70 National Electric Code
2015 International Fire Code
2015 Connecticut State Fire Safety Code
ICC/ANSI A117.1 - 2009
Americans with Disabilities Act, Title III
OSHA - Title 29/ Labor
Section 504, Rehabilitation Act 1973

LEGEND

- RIGID INSULATION
- THERMAL BATT INSULATION
- ACOUSTICAL INSULATION
- FLUSH CONDITION
- 101 — ROOM NUMBER
- 861 / 20 = 43 P. — ROOM OCCUPANCY LOAD; AREA IN SQUARE FEET; ROOM OCCUPANCY LOAD
- 45 / 164 — EXIT CAPACITY; MAXIMUM ALLOWABLE EGRESS OCCUPANCY OF DOOR OR STAIR
- 15 — DIRECTION OF TRAVEL WITH ACCUMULATED OCCUPANCY LOAD
- 145' — MAXIMUM TRAVEL DISTANCE FROM FURTHEST POINT
- ACCESSIBLE AREA OR EXIT
- 1 HOUR FIRE RATED WALL (TIGHT TO DECK ABOVE); 2 HOUR FIRE RATED WALL (TIGHT TO DECK ABOVE); 2 HOUR FIRE WALL WHERE NOTED; ACTUAL EGRESS OCCUPANCY OF DOOR OR STAIR
- 20 MINUTE FIRE RESISTANCE RATING
- $ — SINGLE POLE SWITCH
- $3 — THREE WAY SWITCH
- DUPLEX RECEPTACLE
- EMPTY JUNCTION BOX WITH 3/4" CONDUIT TO ABOVE CEILING
- F — FIRE ALARM PULL STATION
- FIRE ALARM HORN / STROBE
- S — AC/DC SMOKE DETECTOR
- P — PROXIMITY CARD READER BY OWNER
- EM-M — EMERGENCY LIGHT, MASTER UNIT
- EM-S — EMERGENCY LIGHT, SLAVE UNIT
- WALL MOUNTED SELF CONTAINED EXIT SIGN
- WALL MOUNTED EXTERIOR LIGHT - LED
- CEILING MOUNTED LED FIXTURE

NOT FOR CONSTRUCTION

TOWN OF SOUTH WINDSOR BID # 1920-006

THIS DRAWING IS THE PROPERTY OF THE ARCHITECT:
HAS BEEN PREPARED SPECIFICALLY FOR THE OWNER
FOR THIS PROJECT AT THIS SITE, AND IS NOT TO BE USE
FOR ANY OTHER PURPOSE, LOCATION, OR OWNER,
WITHOUT WRITTEN CONSENT OF THE ARCHITECT.

REVISED:

SCALE: 1/8"=1'-0"

DATE: 01/21/2020

DRAWN: L.F.O.

PHILIP H. CERRONE III, AIA, NCARB
ARCHITECT
421 Meadow Street
Fairfield, CT 06824
203.333.2066

Relocatable Classroom at:
Pleasant Valley Elementary School
591 Ellington Road
South Windsor, Connecticut 06074

Proposed 3 Classrooms Floor Plan

19-32

A-2.0

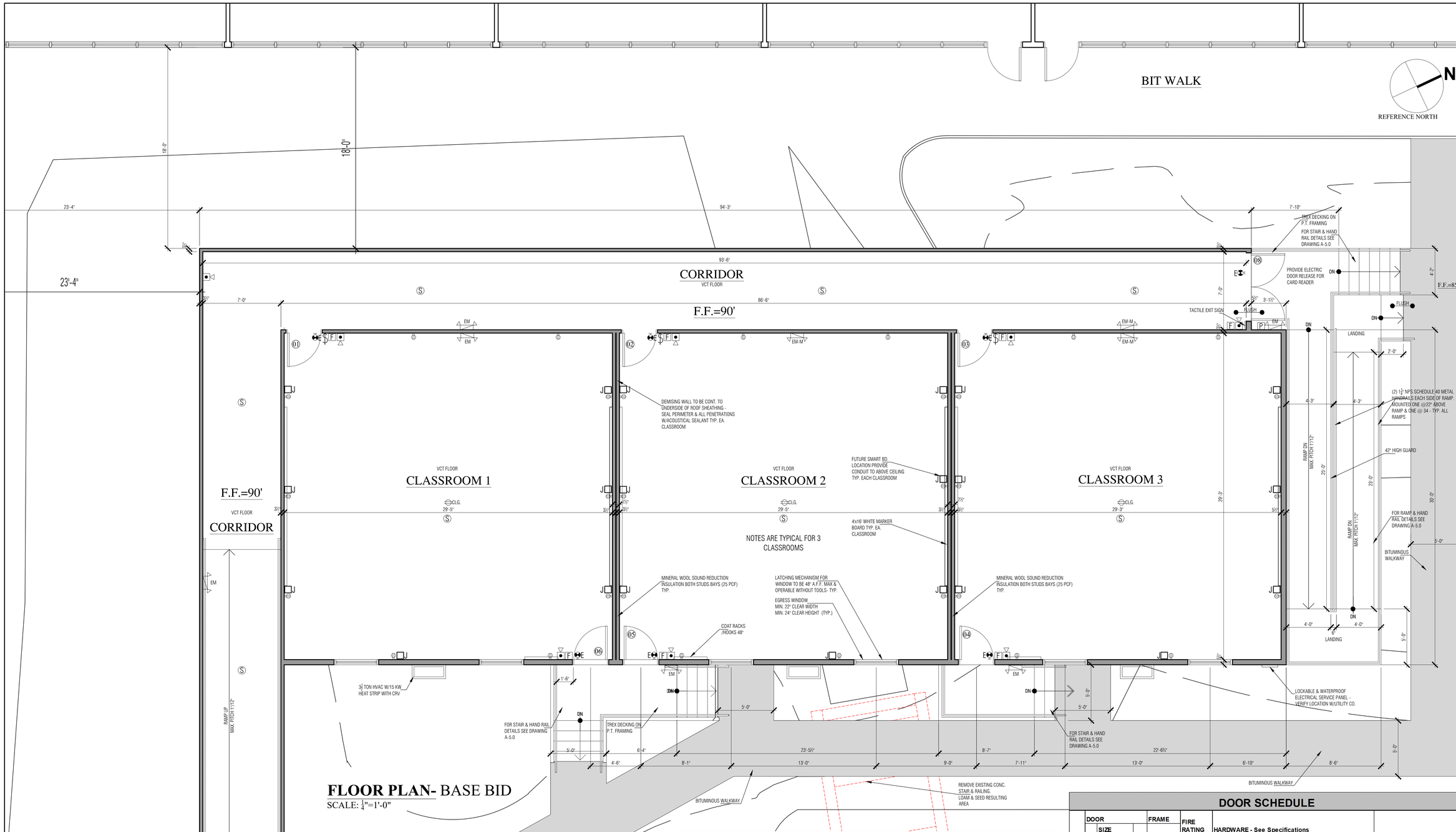

FLOOR PLAN- BASE BID

SCALE: $\frac{1}{4}$"=1'-0"

FIRE EXTINGUISHERS SHALL BE INSTALLED BY OWNER IN CONFORMANCE WITH NFPA 10

NOTES:

1. ALL CONSTRUCTION MUST MEET OR EXCEED THE STANDARDS OF ANSI S12.60-2002 ACOUSTICAL PERFORMANCE CRITERIA, DESIGN REQUIREMENTS & GUIDELINES FOR SCHOOLS.
2. MINIMUM STC RATINGS
   WALLS - 45
   ROOF/CEILING - 45
3. HVAC GRILLS & DIFFUSERS SHALL HAVE A CATALOUGE NOICE CRITERIA RATING OF NC 18 OR LESS
4. FIRE ALARM IS TO BE INSTALLED WITH ALARM IN RELOCATABLE CLASSROOMS INTERCONNECTED WITH SCHOOL SYSTEM
5. DATA WIRE & TERMINATION BY OWNER. CONTRACTOR TO PROVIDE CONDUIT & BACK BOX

● INDICATES REQUIRED WORK
○ INDICATES EXISTING
⊖ INDICATES REUSE RELOCATED EXISTING

DOOR TYPES:

A. FLUSH 18 GAUGE GALVANNEALED STEEL HOLLOW METAL INSULATED DOOR WITH 5" X 20" CLEAR TEMPERED GLASS PANEL, 1-¾" THICK. STEELCRAFT B SERIES DOORS, DESIGN G WITH BAKED-ON PRIMER; BOTTOM OF GLAZING AT 42" ABOVE FLOOR.
B. FLUSH SOLID CORE, RED OAK VENEER WITH VISION PANEL

DOOR FRAMES:

DOOR FRAMES TO BE HOT DIPPED GALVANIZED, 18 GAUGE HOLLOW METAL JAMBS WITH THREE ANCHORS PER JAMB, RUST INHIBITIVE PRIMER AND HARDWARE PREP INCLUDING REQUIRED REINFORCING PLATES. FRAME TO BE 2" X WIDTH REQUIRED.

HARDWARE SET #1

HINCHES:	STANLEY FULL MORTISE CB1900 SERIES, 4-1/2" HIGH HINGES, SATIN CHROME 626 FINISH, MINIMUM THREE PER DOOR.
CLOSER:	LCN 4011/4111 WITH HEAVY DUTY CUSH-N-STOP ARM ON ALL EXTERIOR DOORS. INSTALL CLOSER ON THE LEAST CONSPICUOUS SIDE OF THE DOOR.
EXIT DEVICES:	VON DUPRIN 99 SERIES. DEVICES ON RATED DOORS TO BE UL LISTED.
LATCHSETS/LOCKSET:	SCHLAGE RHODES DESIGN LEVER WITH SATIN CHROME 626 FINISH.
DOOR STOPS:	GLYNN-JOHNSON 60W WALL BUMPERS TO BE INSTALLED FOR ALL DOORS THAT OPEN AGAINST A WALL.
THRESHOLD:	NATIONAL GUARD 425E
WEATHERSTRIPPING:	SILL SWEEP AND WEATHERSTRIPPING SIMILAR TO NATIONAL GUARD 200NA & 152S ON ALL EXTERIOR DOORS.
KICKPLATES:	050 STAINLESS STEEL KICKPLATES, 16" HIGH X 2" LESS THAN DOOR WIDTH.

HARDWARE SUPPLIER TO SUBMIT HARDWARE SCHEDULE FOR THE ARCHITECTS REVIEW.

DOOR SCHEDULE

DOOR NUMBER	DOOR TYPE	DOOR SIZE: Double Leaf Door	DOOR SIZE: 3'-0" x 7'-0"	DOOR Type/ Material	FRAME Material	FIRE RATING: 60 Minutes	FIRE RATING: 20 Minutes	HARDWARE - See Specifications: Panic Release Device	Positive Latching	Automatic Closer	Hold-Open	Classroom Lockset	Lever, U-Handle	Tactile Warning	Kick Plates	SIGNAGE Mounting Height 60" Above Finished Floor	Hardware Set No.	REMARKS
1	B		X	WD	HM	X			X	X		X	X			Classroom No X	1	
2	B		X	WD	HM	X			X	X		X	X			Classroom No X	1	
3	B		X	WD	HM	X			X	X		X	X			Classroom No X	1	
4	A		X	HM	HM				X	X			X		X	EXIT	1	
5	A		X	HM	HM				X	X			X		X	EXIT	1	
6	A		X	HM	HM				X	X			X		X	EXIT	1	
7	A	X	X	HM	HM			X	X	X			X		X	EXIT	2	
8	A	X	X	HM	HM			X	X	X			X		X	EXIT	2	

NOT FOR CONSTRUCTION

TOWN OF SOUTH WINDSOR BID # 1920-006

THIS DRAWING IS THE PROPERTY OF THE ARCHITECT: HAS BEEN PREPARED SPECIFICALLY FOR THE OWNER FOR THIS PROJECT AT THIS SITE, AND IS NOT TO BE USE FOR ANY OTHER PURPOSE, LOCATION, OR OWNER, WITHOUT WRITTEN CONSENT OF THE ARCHITECT.

REVISED:

SCALE: 1/4"=1'-0"

DATE: 01/21/2020

DRAWN: L.F.O.

PHILIP H. CERRONE III, AIA, NCARB
ARCHITECT
421 Meadow Street
Fairfield, CT 06824
203.333.2066

Relocatable Classroom at:
Pleasant Valley Elementary School
591 Ellington Road
South Windsor, Connecticut 06074

Enlarged Proposed 3 Classrooms Floor Plan

19-32

A-2.1

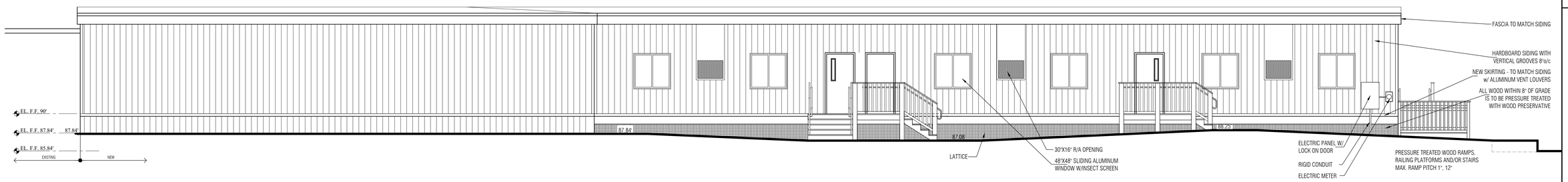

SOUTH EAST ELEVATION

SCALE: $\frac{3}{16}$"=1'-0"

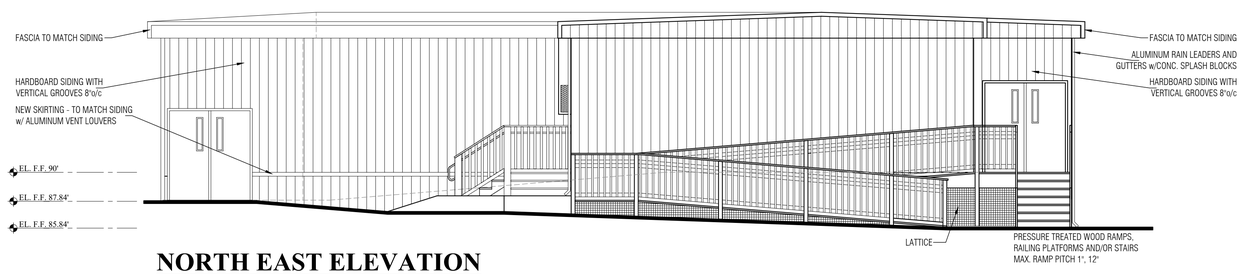

NORTH EAST ELEVATION

SCALE: $\frac{3}{16}$"=1'-0"

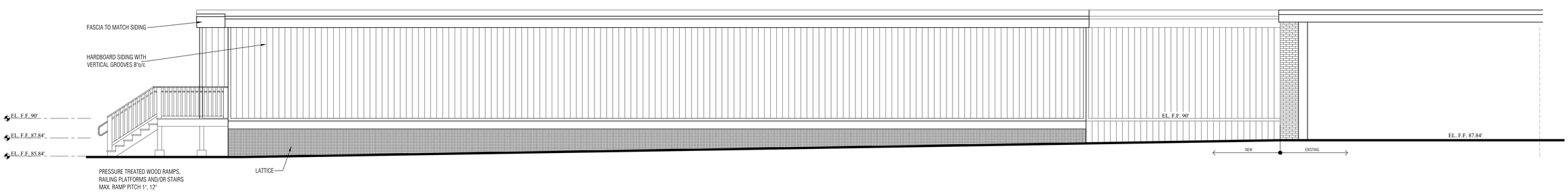

NORTH WEST ELEVATION

SCALE: $\frac{3}{16}$"=1'-0"

NOT FOR CONSTRUCTION

TOWN OF SOUTH WINDSOR BID # 1920-006

THIS DRAWING IS THE PROPERTY OF THE ARCHITECT: HAS BEEN PREPARED SPECIFICALLY FOR THE OWNER FOR THIS PROJECT AT THIS SITE, AND IS NOT TO BE USE FOR ANY OTHER PURPOSE, LOCATION, OR OWNER, WITHOUT WRITTEN CONSENT OF THE ARCHITECT.

REVISED:

SCALE: 3/16"=1'-0"

DATE: 01/21/2020

DRAWN: L.F.O.

PHILIP H. CERRONE III, AIA, NCARB
ARCHITECT
421 Meadow Street
Fairfield, CT 06824
203.333.2066

Relocatable Classroom at:
Pleasant Valley Elementary School
591 Ellington Road
South Windsor, Connecticut 06074

Proposed 3 Classrooms Elevations

19-32

A-3.0

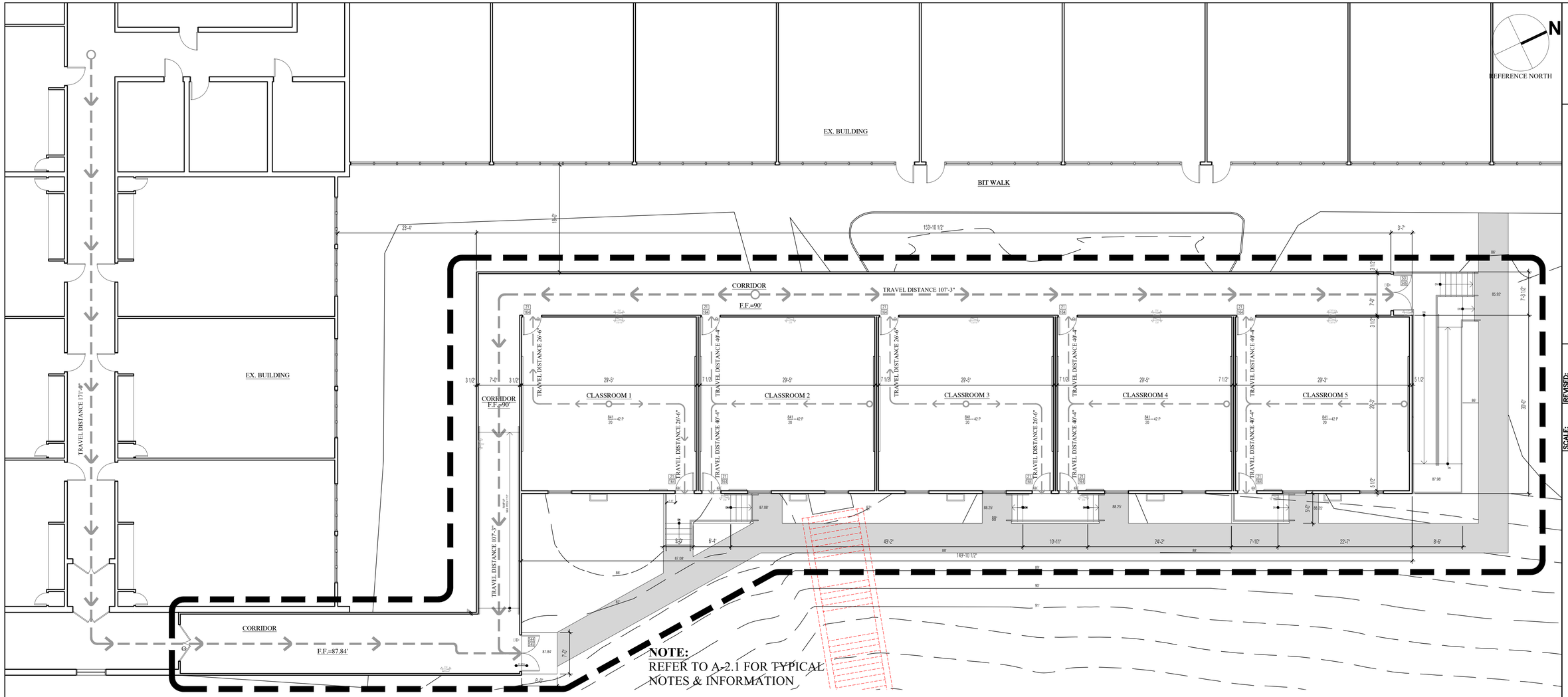

FLOOR PLAN - ALTERNATE #1

SCALE: $\frac{1}{8}$"=1'-0"

USE GROUP
Educational - E
IEBC Classification; Addition

CONSTRUCTION TYPE (Chapter 6)
Type VB; New Construction-Modular classrooms
Type IIIB & VB; Existing Building

BUILDING HEIGHT (Chapter 5)
Allowable Height (story/ ft): One Story; 20 ft
Actual Height (story/ ft): One story; 16 ft

BUILDING AREA (Chapter 5)
Base Allowable Floor Area new construction/ Fire Area; 9500 sf
Total Allowable sf for new construction with fire wall separation; 9,500 sf
New Construction: 6,494 sf
Existing Building: 53,758 sf

FIRE-RESISTANCE RATED REQUIREMENTS FOR BUILDING ELEMENTS
(Table 601) VB

a.	Structural frame: including columns, griders, trusses	0 Hr.
b.	Bearing walls:	
	Exterior:	0 Hr.
	Interior:	0 Hr.
c.	Nonbearing walls and partitions (Exterior)	0 Hr.
d.	Nonbearing walls and partitions (Interior)	0 Hr.
e.	Floor construction (including supporting beams and joists)	0 Hr.
f.	Roof construction (including supporting beams and joists)	0 Hr.
	Fire rating of exterior walls (Table 602)	
	Separation distance; Greater than 10'	0 Hr. Required

SEPARATIONS
Corridor Separations (IBC 1018); 1 hr fire rated

EXIT ACCESS TRAVEL DISTANCE (Table 1017.2)
Maximum allowed travel distance without Fire Sprinkler
Use Group E = 200 ft

Common path of travel (Table 1006.2.1) without fire sprinkler
Use Group E = 75 ft

OCCUPANT LOAD (1004.1.2)
Educational; 1/20 sf for classrooms

CORRIDORS (IBC 1020)
Educational > 100P Min. width = 72"
1 Hr. rated > 30P

EXITS
- Spaces with one exit (Table 1006.2.1)
  Use Group E: Max. 49 people/74 ft.
- Stories with one exit (Table 1006.3.2(1) & (2)
  Use Group E: 49 people & 75 ft. max
  Dead Ends (IBC 1020.4) 20 ft.
- Stairs (Section 1005 & 1011.2)
  Width required: 44" minimum & 0.3" per person; 36" if less than 50P
- Doors (IBC 1005.3.2 & 1010.1.1)
  Min. 32" clear width & 0.2" per person
- Ramps (IBC 1010.6- Means of Egress Ramp)
  Min. 72" clear width & 0.2" per person
- Panic Device (IBC 1010.1.10) required on exit doors
  'E' occupancy > 50P

MODIFICATIONS
Modification for exemption from subsection (a) of CGS 29-315, as amended by Public Act 05-31. Pending

THRESHOLD BUILDING CONDITIONS
Not Applicable

BUILDING AREAS FOR GRANT CALCULATIONS (ENTIRE FACILITY)

Existing unaltered construction	53,758 sf
Existing altered construction	0
Existing being demolished	0
Total existing construction	53,758 sf
Total new construction/ addition	6,494 sf
Total facility proposed	60,252 sf

MINIMUM PLUMBING FIXTURE COUNT (IPC Chapter 4)

		Required	Provided
Group E Occupancy:			
(Design Load = 1218)	W/C	27	35
	Lav	27	28
	D/F	12	

APPLICABLE CODES
2018 Connecticut State Building Code including the following:
2015 International Existing Building Code
2015 International Building Code
Connecticut Supplement, 2018
2015 International Energy Code
2015 International Mechanical Code
2015 International Plumbing Code
2017 NFPA 70 National Electric Code
2015 International Fire Code
2015 Connecticut State Fire Safety Code
ICC/ANSI A117.1 - 2009
Americans with Disabilities Act, Title III
OSHA - Title 29/ Labor
Section 504, Rehabilitation Act 1973

NOT FOR CONSTRUCTION

TOWN OF SOUTH WINDSOR BID # 1920-006

THIS DRAWING IS THE PROPERTY OF THE ARCHITECT:
HAS BEEN PREPARED SPECIFICALLY FOR THE OWNER
FOR THIS PROJECT AT THIS SITE, AND IS NOT TO BE USE
FOR ANY OTHER PURPOSE, LOCATION, OR OWNER,
WITHOUT WRITTEN CONSENT OF THE ARCHITECT.

REVISED:

SCALE: 1/8"=1'-0"
DATE: 01/21/2020
DRAWN: L.F.O.

PHILIP H. CERRONE III, AIA, NCARB
ARCHITECT
421 Meadow Street
Fairfield, CT 06824
203.333.2066

Relocatable Classroom at:
Pleasant Valley Elementary School
591 Ellington Road
South Windsor, Connecticut 06074

Proposed 5 Classrooms Floor Plan

19-32

A-2.0a

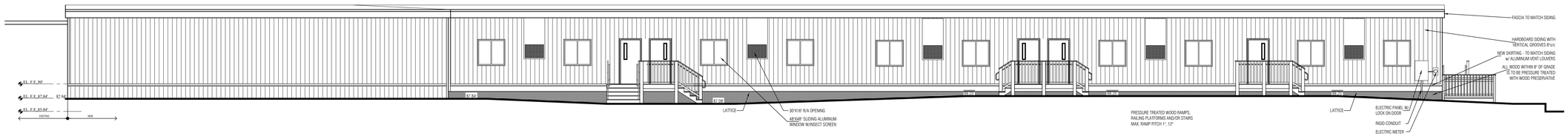

SOUTH EAST ELEVATION- ALTERNATE #1

SCALE: $\frac{1}{8}$"=1'-0"

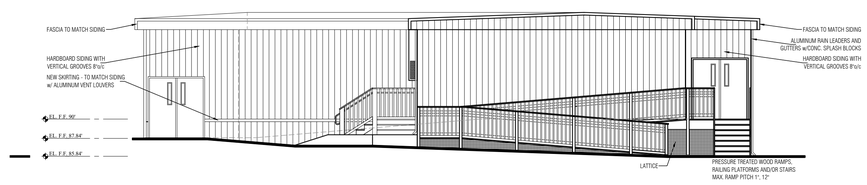

NORTH EAST ELEVATION- ALTERNATE #1

SCALE: $\frac{1}{8}$"=1'-0"

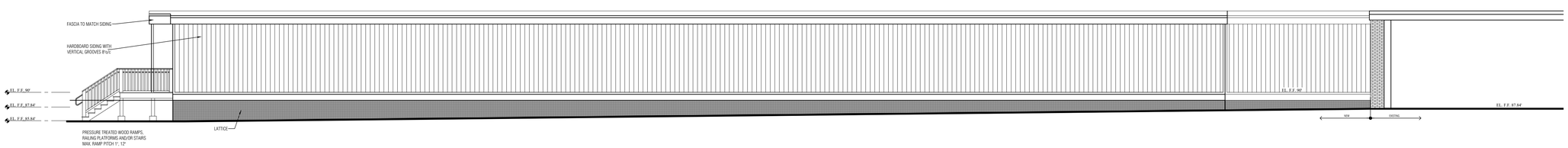

NORTH WEST ELEVATION- ALTERNATE #1

SCALE: $\frac{1}{8}$"=1'-0"

NOT FOR CONSTRUCTION

TOWN OF SOUTH WINDSOR BID # 1920-006

THIS DRAWING IS THE PROPERTY OF THE ARCHITECT: HAS BEEN PREPARED SPECIFICALLY FOR THE OWNER FOR THIS PROJECT AT THIS SITE, AND IS NOT TO BE USE FOR ANY OTHER PURPOSE, LOCATION, OR OWNER, WITHOUT WRITTEN CONSENT OF THE ARCHITECT.

REVISED:

SCALE: 1/8"=1'-0"

DATE: 01/21/2020

DRAWN: L.F.O.

PHILIP H. CERRONE III, AIA, NCARB
ARCHITECT
421 Meadow Street
Fairfield, CT 06824
203.333.2066

Relocatable Classroom at:
Pleasant Valley Elementary School
591 Ellington Road
South Windsor, Connecticut 06074

Proposed 5 Classrooms Elevations

19-32

A-3.0a

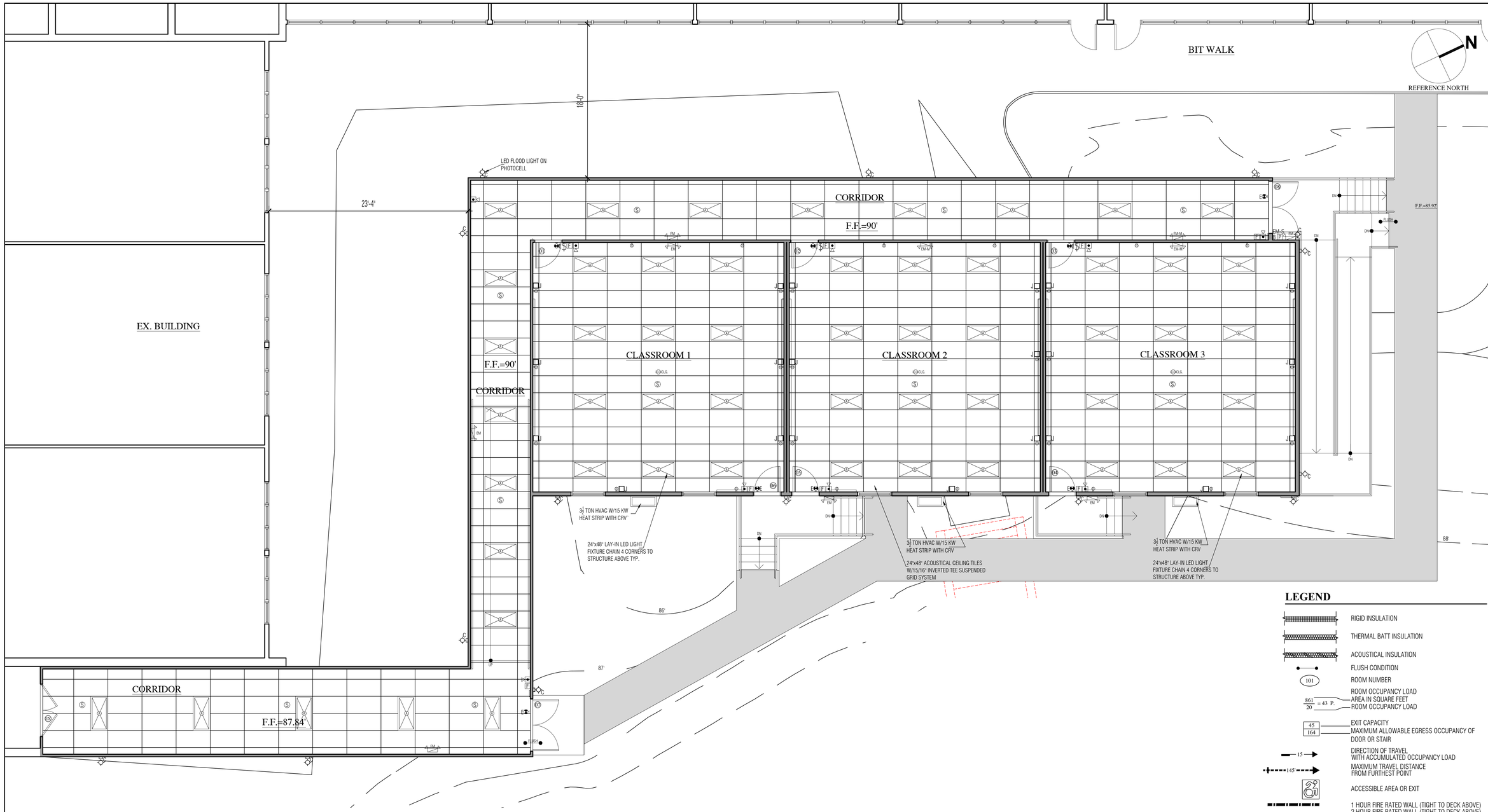

REFLECTED CEILING PLAN- BASE BID

SCALE: $\frac{3}{16}$"=1'-0"

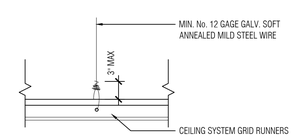

ACT GRID HANGER DETAIL

N.T.S.

INSTALL IN CONFORMANCE WITH ASTM C636 & C635 & WITH MAX. DEFLECTION OF 1/360

NOTES:
1. INSTALL DUPLEX RECEPTACLE ON ROOF ADJACENT TO HVAC UNITES.

LEGEND

- RIGID INSULATION
- THERMAL BATT INSULATION
- ACOUSTICAL INSULATION
- FLUSH CONDITION
- 101 — ROOM NUMBER
- $\frac{861}{20}$ = 43 P. — ROOM OCCUPANCY LOAD; AREA IN SQUARE FEET; ROOM OCCUPANCY LOAD
- $\frac{45}{164}$ — EXIT CAPACITY; MAXIMUM ALLOWABLE EGRESS OCCUPANCY OF DOOR OR STAIR
- 15 — DIRECTION OF TRAVEL WITH ACCUMULATED OCCUPANCY LOAD
- 145' — MAXIMUM TRAVEL DISTANCE FROM FURTHEST POINT
- ACCESSIBLE AREA OR EXIT
- 1 HOUR FIRE RATED WALL (TIGHT TO DECK ABOVE)
- 2 HOUR FIRE RATED WALL (TIGHT TO DECK ABOVE)
- 2 HOUR FIRE WALL WHERE NOTED
- ACTUAL EGRESS OCCUPANCY OF DOOR OR STAIR
- 20 MINUTE FIRE RESISTANCE RATING
- $ — SINGLE POLE SWITCH
- $3 — THREE WAY SWITCH
- DUPLEX RECEPTACLE
- J — EMPTY JUNCTION BOX WITH 3/4" CONDUIT TO ABOVE CEILING
- F — FIRE ALARM PULL STATION
- FIRE ALARM HORN / STROBE
- S — AC/DC SMOKE DETECTOR
- P — PROXIMITY CARD READER BY OWNER
- EM–M — EMERGENCY LIGHT, MASTER UNIT
- EM–S — EMERGENCY LIGHT, SLAVE UNIT
- WALL MOUNTED SELF CONTAINED EXIT SIGN
- WALL MOUNTED EXTERIOR LIGHT - LED
- CEILING MOUNTED LED FIXTURE

NOT FOR CONSTRUCTION

TOWN OF SOUTH WINDSOR BID # 1920-006

THIS DRAWING IS THE PROPERTY OF THE ARCHITECT: HAS BEEN PREPARED SPECIFICALLY FOR THE OWNER FOR THIS PROJECT AT THIS SITE, AND IS NOT TO BE USE FOR ANY OTHER PURPOSE, LOCATION, OR OWNER, WITHOUT WRITTEN CONSENT OF THE ARCHITECT.

REVISED:

SCALE: 3/16=1'-0"

DATE: 01/21/2020

DRAWN: L.F.O.

PHILIP H. CERRONE III, AIA, NCARB
ARCHITECT
421 Meadow Street
Fairfield, CT 06824
203.333.2066

Relocatable Classroom at:
Pleasant Valley Elementary School
591 Ellington Road
South Windsor, Connecticut 06074

Reflected Ceiling Plan

19-32

A-4.0

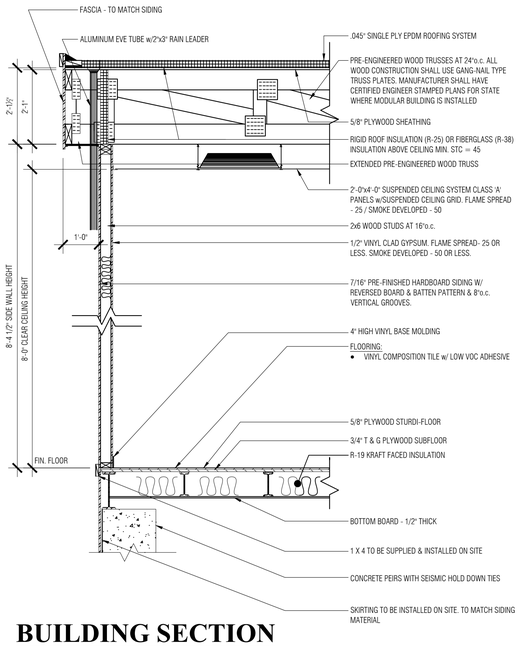

BUILDING SECTION

SCALE: $\frac{1}{2}$"=1'-0"

GENERAL NOTES

1. ALL INSULATION TO BE BATT. TYPE W/ KRAFT PAPER ON WARM SIDE, AS FOLLOWS:
   FLOOR 6" (R-30)
   WALLS 3-1/2" (R-20)
   ROOF (R-25) C.I. OR R-38
2. ALL STRUCTURAL LUMBER TO BE DOUGLAS FIR w/fb=1350 P.S.I. UNLESS OTHERWISE SPECIFIED ON DRAWINGS.
3. ALL OPENINGS OVER 3'-0" TO HAVE HEADERS. ALL HEADERS, UNLESS OTHERWISE NOTED, SHALL BE (2) 2X6 W/ 1/2" PLYWOOD SPACER (GLUED & NAILED) AND LIMITED TO 6'-0" CLEAR SPANS.
4. ALL INTERIOR PARITITIONS SHALL BY 2X4 WOOD STUDS AT 16" O.C. UNLESS OTHERWISE NOTED. INSTALL 3-1/2" INSULATION (UNFACED) FOR SOUND DEADENING.
5. ALL MODULAR COMMON MATING WALLS SHALL BE DOUBLE 2X4 WOOD STUDS AT 16" O.C. UNLESS OTHERWISE NOTED.
6. THE FASCIA WILL BE DETERMINED BY THE PRE-ENGINEERED WOOD TRUSS HEIGHT. THE TRUSS SHALL EXTEND TO THE WIDTH OF THE ROOF OVERHANG AS SHOWN ON THE CROSS-SECTION.
7. ROOF TO HAVE MIN. 1/2" PER FOOT SLOPE

NOTES:

1. ALL CONSTRUCTION MUST MEET OR EXCEED THE STANDARDS OF ANSI S12.60-2002 ACOUSTICAL PERFORMANCE CRITERIA, DESIGN REQUIREMENTS & GUIDELINES FOR SCHOOLS.
2. MINIMUM STC RATINGS
   WALLS - 45
   ROOF/CEILING - 45
3. HVAC GRILLS & DIFFUSERS SHALL HAVE A CATALOGUE NOTICE CRITERIA RATING OF NC 18 OR LESS
4. PROVIDE SIESMIC TIE DOWN CONNECTIONS TO MEET ALL BUILDING CODE REQUIREMENTS

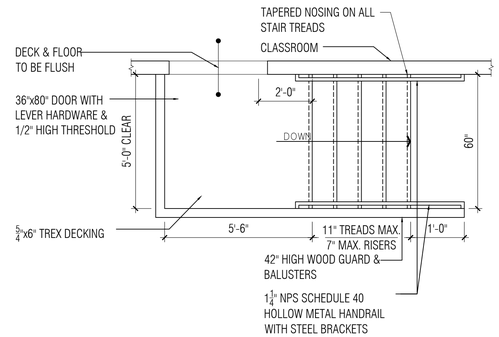

TYPICAL STAIR PLAN

SCALE: $\frac{3}{4}$"=1'-0"

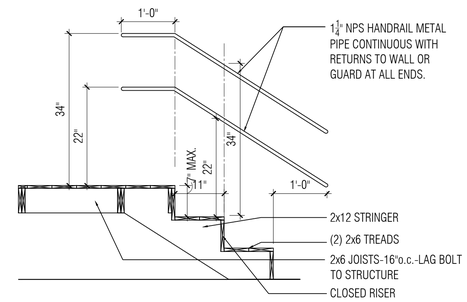

TYPICAL STAIR HAND RAIL EXTENSIONS

SCALE: $\frac{3}{4}$"=1'-0"

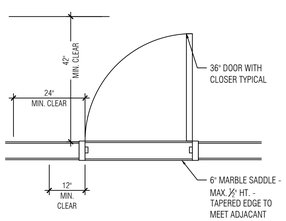

TYPICAL DOOR CLEARANCE

SCALE: $\frac{1}{2}$"=1'-0"

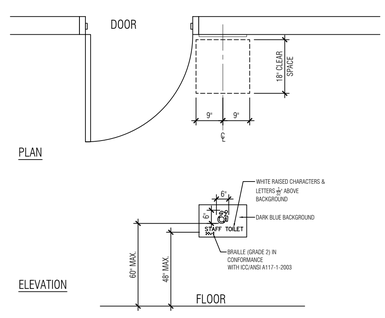

LOCATION OF TACTILE SIGNS

SCALE: $\frac{1}{2}$"=1'-0"

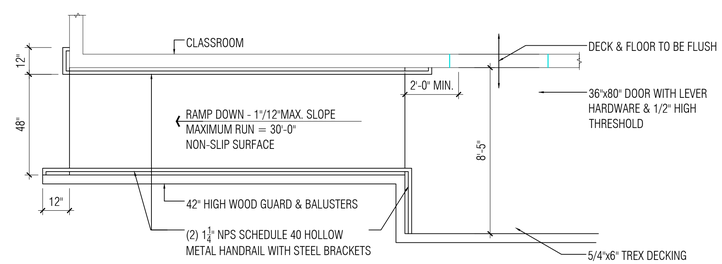

TYPICAL RAMP PLAN

SCALE: $\frac{3}{4}$"=1'-0"

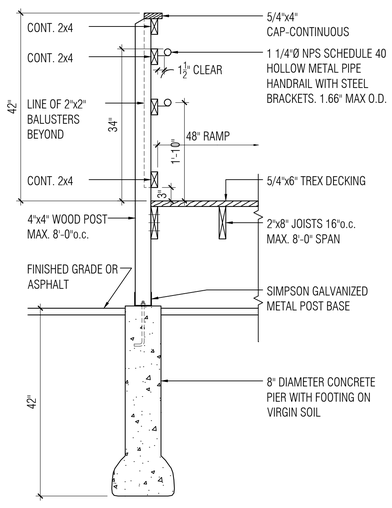

TYPICAL SECTION THRU RAMP RAILING

SCALE: $\frac{3}{4}$"=1'-0"

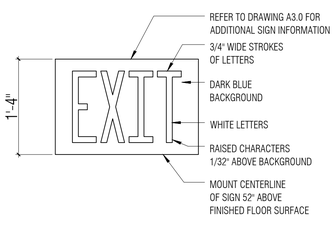

TACTILE EXIT SIGN

SCALE: 3"=1'-0"

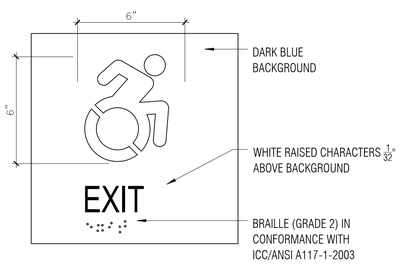

TACTILE EXIT /ACCESSIBILITY SIGN

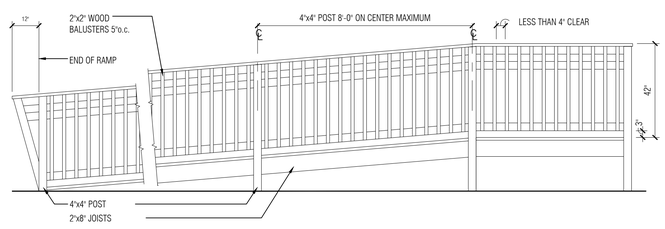

TYPICAL RAMP ELEVATION

SCALE: $\frac{3}{4}$"=1'-0"

NOT FOR CONSTRUCTION

TOWN OF SOUTH WINDSOR BID # 1920-006

THIS DRAWING IS THE PROPERTY OF THE ARCHITECT: HAS BEEN PREPARED SPECIFICALLY FOR THE OWNER FOR THIS PROJECT AT THIS SITE, AND IS NOT TO BE USE FOR ANY OTHER PURPOSE, LOCATION, OR OWNER, WITHOUT WRITTEN CONSENT OF THE ARCHITECT.

REVISED:

SCALE: AS NOTED

DATE: 01/21/2020

DRAWN: L.F.O.

PHILIP H. CERRONE III, AIA, NCARB
ARCHITECT
421 Meadow Street
Fairfield, CT 06824
203.333.2066

Relocatable Classroom at:
Pleasant Valley Elementary School
591 Ellington Road
South Windsor, Connecticut 06074

Misc. Details

19-32

A-5.0